Patent #'s
US 9,874,018
US 9,909,309
US 9,920,532
US 9,797,140
US 9,777,531
US 9,598,867
US 9,441,378

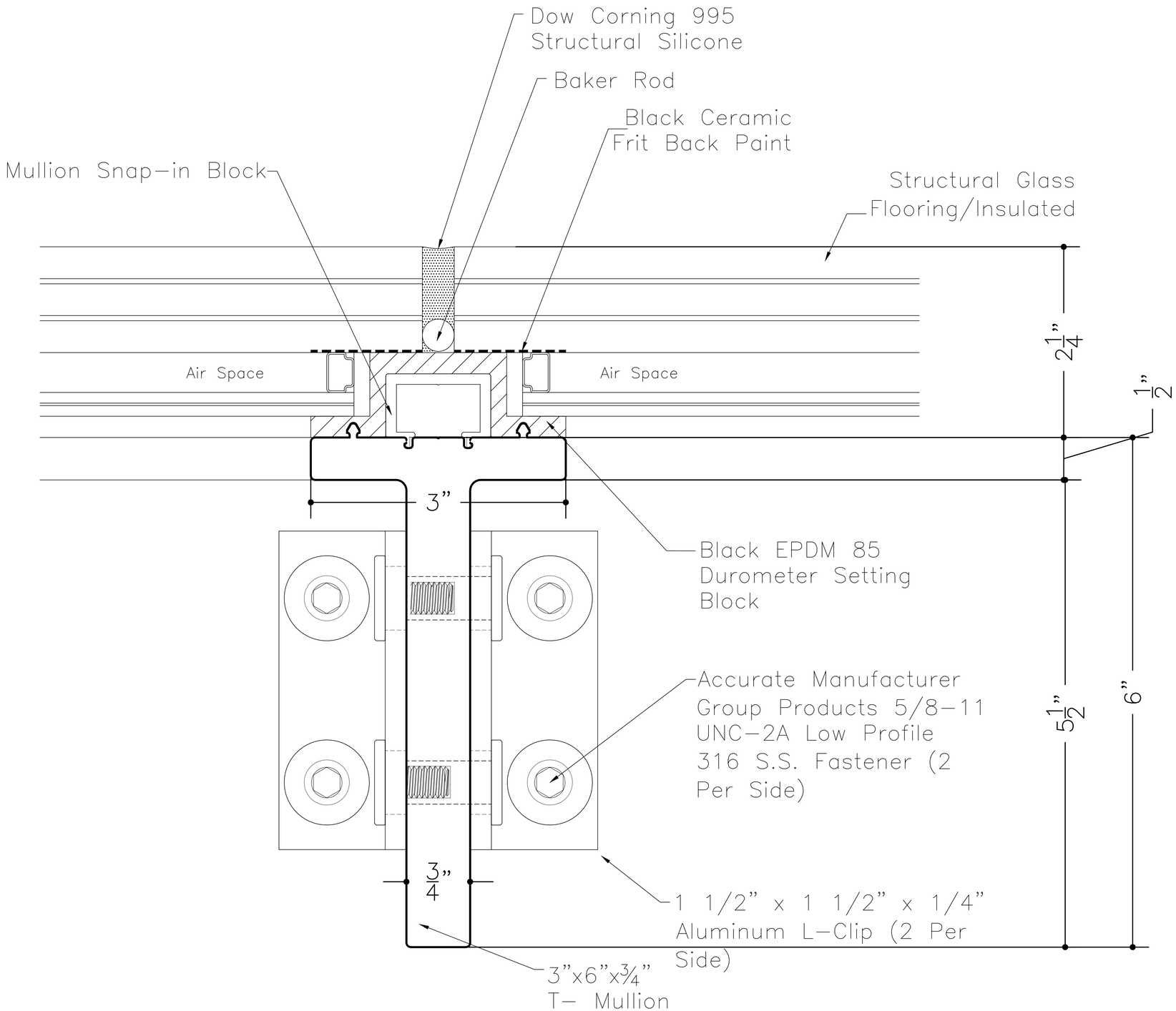

SkyFloor® Series 1000 Thermal T-Rafter

GLASS FLOORING SYSTEMS INC

MANUFACTURER	Glass Flooring Systems, Inc. 6 Aaron Way Sparta, NJ 07871
TITLE	SkyFloor® Series 1000 Thermal T-Rafter
SCALE: NTS	

DRAWN	DATE	PART NUMBER	SHEET
GFS	12/12/25	GFS 1-2	1 OF 1